This distance is the vertical distance between the flat edge of the large surface and the engraved edge

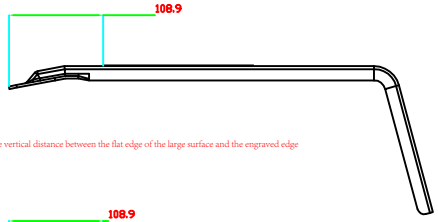

This distance is the vertical distance between the flat edge of the large surface and the engraved edge

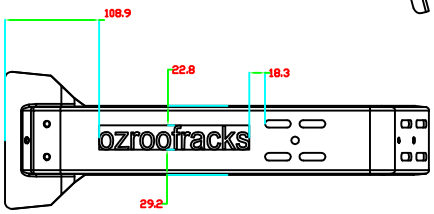

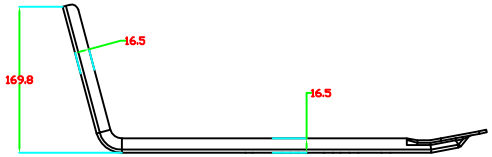

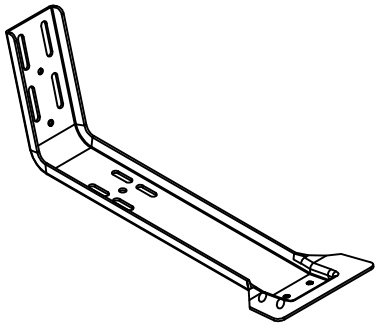

This distance is the distance from the bottom surface to the inner edge of the hole

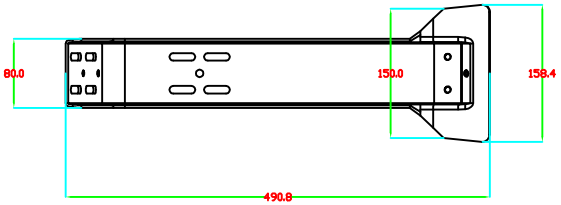

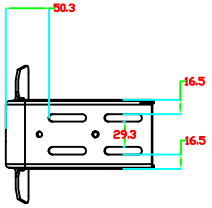

Center all short faces of holes in the front and back directions

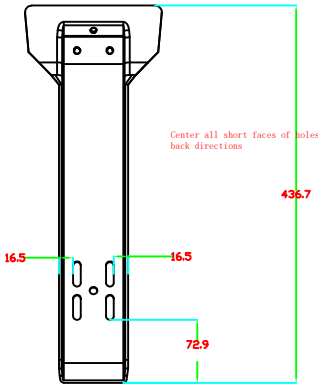

This distance is the distance from the bottom surface to the inner edge of the hole